深圳天显威科技有限公司

认　　可　　书

SPECIFICATION　FOR　APPROVAL

客户名称

CUSTOMER ：

客户型号

CLIENT TYPE ：

产品编号

PRODUCTION NO.： **TXW64128-41-TSWG13P096G-A**

出品日期

SHIPMENT DATE： **2021** 年 **03** 月 **17** 日

客户确认签章: VALIDATED:

	签名 SIGNATURE	日期 DATE
拟制 PREPARED	韦章琦	2021-03-17
审核 CHECKED	刘静帅	2021-03-17
批准 APPROVED	张海标	2021-03-17

CONTENTS

RECORDS OF REVISION

DATE	REVISED NO.	REVISED DESCRIPTIONS	PREPARED	CHECKED	APPROVED
03.17.2021	VER1.0	FIRST ISSUE			

3. GENERAL SPECIFICATIONS：

3-1 SCOPE:

This specification covers the delivery requirements for the organic light emitting diode display delivered by quality to Customer.

3-2 PRODUCTS:

Organic light emitting diode (OLED)

3-3 MODULE NAME:

TXW64128-41-TSWG13P096G-A

4. FEATURES：

(1) Display Color: WHITE
(2) Dot Matrix: 64x128
(3) Drive IC: SSD1312
(4) Viewing Angle: 160。
(5) Aperture rate: 78%
(6) Interface: 4-wire serial interface, I^2C

5. MACHANICAL SPECIFICATIONS：

ITEM	SPECIFICATIONS	UNIT
MODULE SIZE	14.0(W)x28.0(H)x1.227(D)	mm
VIEWING AREA	11.86 (W) x 22.74(H)	mm
ACTIVE AREA	10.86 (W) x 21.74(H)	mm
DOT SIZE	0.15(W) x0.15(H)	mm
DOT PITCH	0.17(W) x0.17 (H)	mm
ASSY.TYPE	COG	---
WEIGHT	TBD	

NOTES:

OLED should be grounded during handling OLED.

All Pages Of This Edition Approved	
Signature:	Date:

REV.	DESCRIPTION	REVISER	DATE
A0	First	luojinwei	2021-03-17

6. OUTLINE DIMENSIONS

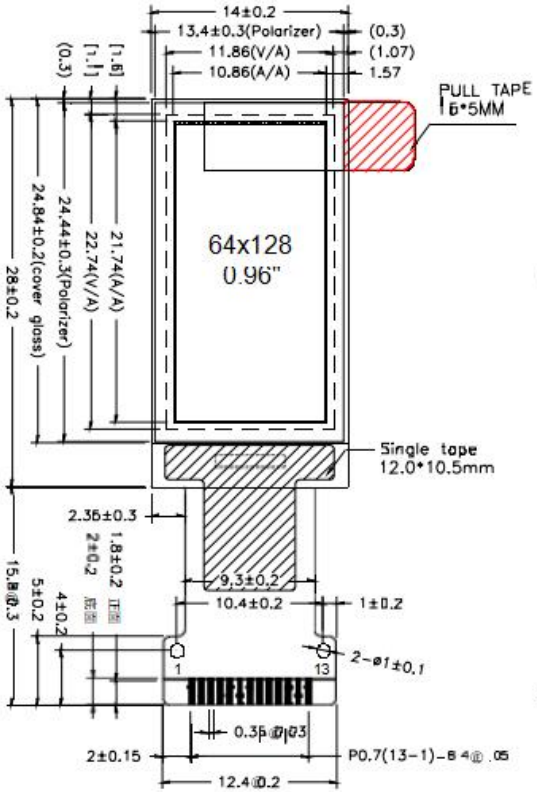

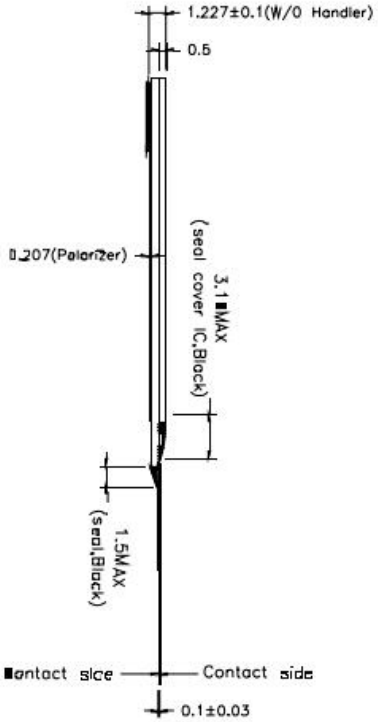

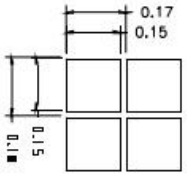

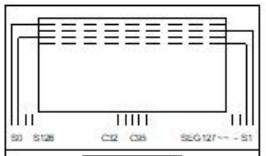

SEG & COM Layout

PIN	SYMBOL
1	NC
2	VPP
3	VCOMH
4	VDD
5	IM1
6	IREF
7	CS
8	RES
9	A0
10	D0
11	D1
12	VSS
13	NC

Specifications:

1. Display : OLED(White).
2. Dot Matrix: 64*128
3. Dot Size: 0.15*0.15mm
4. Dot Pitch: 0.17*0.17mm
5. Aperture Rate: 78%
6. Active Area : 10.86*21.74mm
7. Drive IC: SSD1312
8. FPC P/N: FPC-HP64128-41-A0

深圳天显威科技有限公司

Unspecified Tolerance: ±0.20	UNITS: mm	DATE:	MODEL NUMBER:		SHEET:	1 OF 1
DESIGN BY: luojinwei		2021-03-17			SCALE:	1 : 1
CHECKED BY:						
APPROVED BY:			DO NOT SCALE THIS DRAWING.	PROJECTION		

STANDARD DOC.	PRODUCT SPEC.	MODULE NO.	TXW64128-41-TSWG13P096G-A	PAGE	5 / 26

7. INERFACE SPECIFICATIONS

7-1. PIN ASSIGNMENT

PIN NO.	SYMBOL	TYPE	FUNCTION DESCRIPTIONS
1	NC		NC
2	VPP	P	Power supply for OLED driving voltage. This is the most positive voltage supply pad of the chip. It should be supplied externally.
3	VCOMH	O	Com signal deselected voltage level. A capacitor should be connected between this pad and VSS.
4	VDD	P	Power pin for logic circuit. It must be connected to external source.
5	IM1	I	Interface selection pins. IM1 I^2C 1 4-wire SPI 0
6	IREF	I	Current reference for brightness adjustment. This is segment output current reference pin. A resistor should be connected between this pin and VSS . Set the current at 10uA maximum.
7	CS	I	Chip Select input pin. Active “L”
8	RES	I	Hardware reset input pin. Active “L”.
9	A0	I	This pin is Data/Command control pin. When the pin is pulled HIGH, the data at D[7:0] is data. When the pin is pulled LOW, the data at D[7:0] is command. In I2C mode, this pin acts as SA0 for slave address section.
10	D0	I/O	When the serial interface is selected, then D0 serves as the serial clock input pad (SCL) and D1 serves as the serial data input pad (SI). When the I2C interface is selected, then D0 serves as the serial clock input pad (SCL) and D1 serves as the serial data input pad (SDA).
11	D1		
12	VSS	P	Ground pin. It must be connected to external ground.
13	NC		NC

7-2 APPLICATION CIRCUIT

7-2-1 4-Wire Serial Interface With external VPP

特别提醒(Special Tips):主板设计务必加电子开关，否则，可能引起漏电流现象

(When design mainboard, Pleaseadd Electronic Switch circuit, otherwise, will becaused leak current)

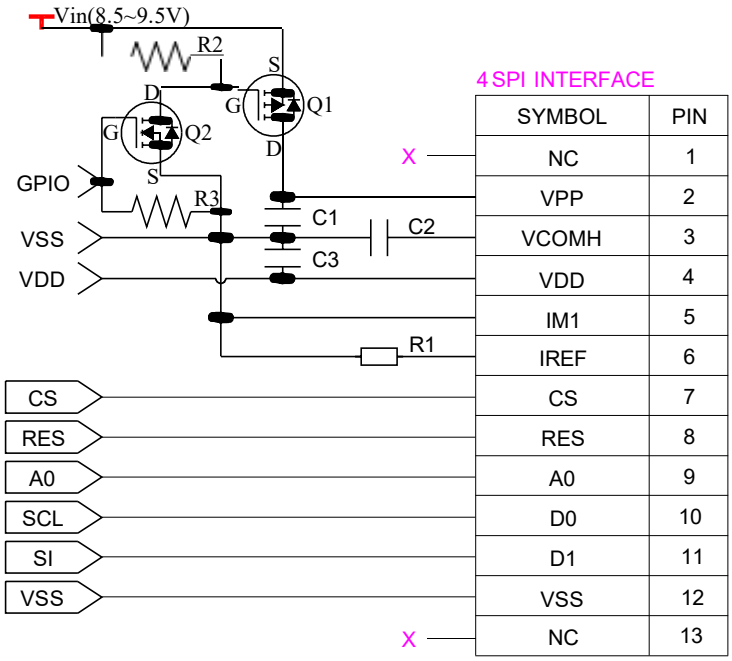

Recommended Components:

C3: 1μF / 16V, X5R

C1, C2: 4.7uF/25V(Tantalum type)

R1: 560kΩ, R1 = (Voltage at IREF - VSS) / IREF

R2, R3: 47kΩ

Q1: FDN338P

Q2: FDN335N

Notes:

VDD: 1.65~3.3V, it should be equal to MPU I/Ovoltage.

Vin: 8.5~9.5V

7-2-2 **I²C Interface With** external VPP

特别提醒**(Special Tips):**主板设计务必加电子开关，否则，可能引起漏电流现象

(When design mainboard, Pleaseadd Electronic Switch circuit, otherwise, will becaused leak current)

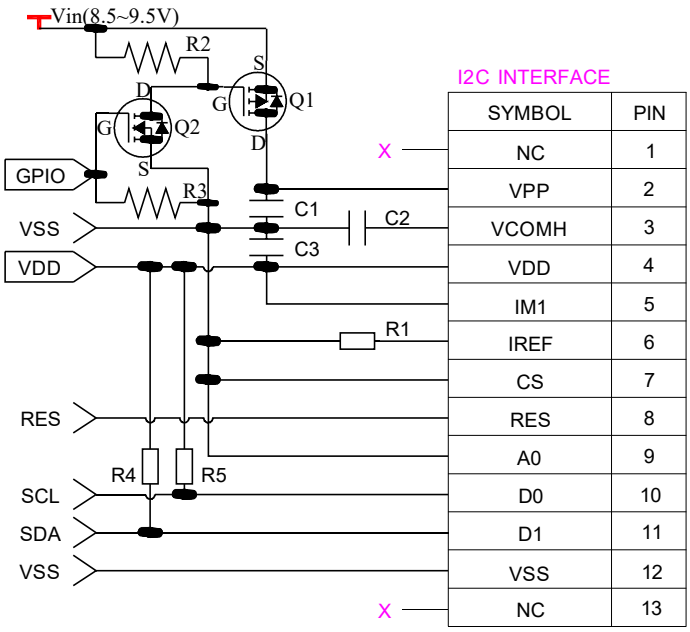

Recommended Components:

C3:	1μF / 16V, X5R
C1, C2:	4.7uF/25V(Tantalum type)
R1:	560kΩ, R1 = (Voltage at IREF - VSS) / IREF
R2, R3:	47kΩ
R4, R5:	4.7kΩ
Q1:	FDN338P
Q2:	FDN335N

Notes:

VDD:	1.65~3.3V, it should be equal to MPU I/Ovoltage.
Vin:	8.5~9.5V

8. ABSOLUTE MAXIMUM RATING

Characteristic	Symbol	Standard Value			Unit	Notes
		MIN	TYP	MAX		
Power Supply Voltage(1)	V_{DD}	-0.3	-	+3.6	V	1,2
Power Supply Voltage(3)	V_{PP}	0	-	+15	V	1,2
Operating Temperature	T_{OPR}	-40	-	+70	^{0}C	
Storage Temperature	T_{STG}	-40	-	+85	^{0}C	3
LifeTime (120 cd/m^2)		10000	-	-	hour	4
LifeTime (80 cd/m^2)		30000	-	-	hour	4
LifeTime (60 cd/m^2)		50000	-	-	hour	4

Note 1: All the above voltages are on the basis of "V_{SS} = 0V".

Note 2: When this module is used beyond the above absolute maximum ratings, permanent breakage of the module may occur. Also, for normal operations, it is desirable to use this module under the conditions according to Section 9-1 "DC ELECTRICAL CHARACTERISTICS". If this module is used beyond these conditions, malfunctioning of the module can occur and the reliability of the module may deteriorate.

Note 3: The defined temperature ranges do not include the polarizer. The maximum withstood temperature of the polarizer should be 80。C.

Note 4: V_{PP} = 9.0V, T_a = 25°C, 50% Checkerboard.

End of lifetime is specified as 50% of initial brightness reached. The average operating lifetime at room temperature is estimated by the accelerated operation at high temperature conditions.

9. ELECTRICAL CHARACTERISTICS

9-1 DC ELECTRICAL CHARACTERISTICS

Symbol	Parameter	Test condition	Standard Value			Unit
			MIN	TYP	MAX	
V_{DD}	Logic Supply Voltage	-	1.65	2.8	3.3	V
V_{PP}	Operating Voltage for OLED (Supplied Externally)	Internal Charge Pump Disable	8.5	9.0	9.5	V
V_{IH}	High Logic Input Level		0.8*V_{DD}	-	V_{DD}	V
V_{IL}	Low Logic Input Level		0	-	0.2*V_{DD}	V
V_{OH}	High Logic Output Level	I_{OUT} = 100μA, 3.3MHz	0.8*V_{DD}	-	V_{DD}	V
V_{OL}	Low Logic Output Level	I_{OUT} = 100μA, 3.3MHz	0	-	0.2*V_{DD}	V
$I_{DD, SLEEP}$	I_{DD}, Sleep Mode Current		-	-	10	uA
$I_{PP, SLEEP}$	I_{PP}, Sleep Mode Current		-	-	10	uA
I_{DD}	V_{DD} Supply Current		-	305	375	uA
I_{PP}	V_{PP} Supply Current (V_{PP} Supplied Externally)	V_{DD} = 2.8V, V_{CC} = 9V, 100% Display Area Turn on	-	11.0	16.0	mA

9-2 ELECTRO-OPTICAL CHARACTERISTICS

Symbol	Parameter	condition	Standard Value			Unit
			MIN	TYP	MAX	
L_{br}	Brightness (V_{PP} Supplied Externally)		120	160	-	cd/m^2
(x)	C.I.E. (White)	C.I.E. 1931	0.23	0.27	0.31	
(y)			0.25	0.29	0.33	
CR	Dark Room Contrast		-	2000:1	-	
	Viewing Angle		-	160	-	degree

* Optical measurement taken at V_{DD} = 2.8V, V_{PP} = 9V

9-3 AC ELECTRICAL CHARACTERISTICS

9-3-1 4 Wire Serial Interface Timing Characteristics

(V_{DD} - V_{SS} = 1.65V~3.5V, T_A = 25°C)

Symbol	Parameter	Min	Typ	Max	Unit
t_{cycle}	Clock Cycle Time	50	-	-	ns
t_{AS}	Address Setup Time	10	-	-	ns
t_{AH}	Address Hold Time	10	-	-	ns
t_{CSS}	Chip Select Setup Time	10	-	-	ns
t_{CSH}	Chip Select Hold Time	10	-	-	ns
t_{DSW}	Write Data Setup Time	10	-	-	ns
t_{DHW}	Write Data Hold Time	10	-	-	ns
t_{CLKL}	Clock Low Time	15	-	-	ns
t_{CLKH}	Clock High Time	20	-	-	ns
t_R	Rise Time	-	-	10	ns
t_F	Fall Time	-	-	10	ns

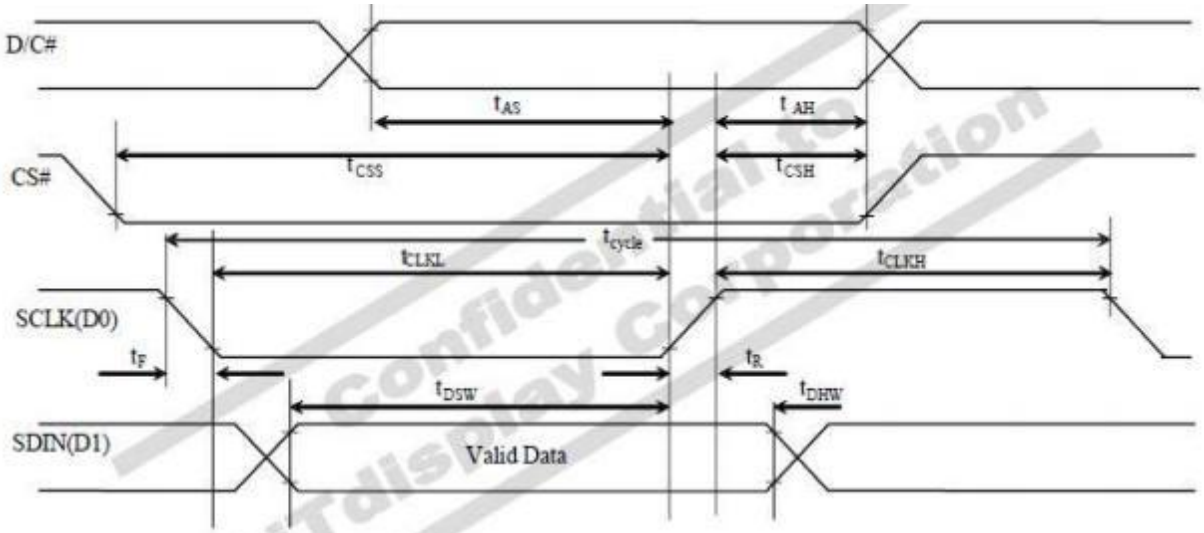

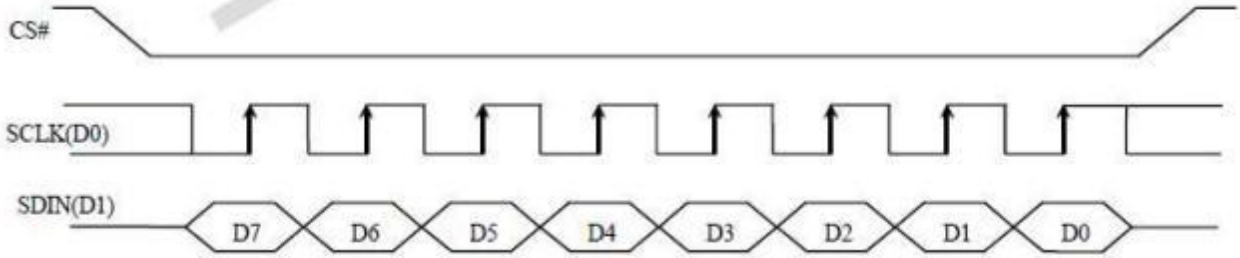

9-3-2 **I²C Interface Timing Characteristics**

Symbol	Parameter	Min	Typ	Max	Unit
t_{cycle}	Clock Cycle Time	2.5	-	-	us
t_{HSTART}	Start condition Hold Time	0.6	-	-	us
t_{HD}	Data Hold Time (for "SDA_{OUT}" pin)	0	-	-	ns
	Data Hold Time (for "SDA_{IN}" pin)	300	-	-	ns
t_{SD}	Data Setup Time	100	-	-	ns
t_{SSTART}	Start condition Setup Time (Only relevant for a repeated Start condition)	0.6	-	-	us
t_{SSTOP}	Stop condition Setup Time	0.6	-	-	us
t_R	Rise Time for data and clock pin	-	-	300	ns
t_F	Fall Time for data and clock pin	-	-	300	ns
t_{IDLE}	Idle Time before a new transmission can start	1.3	-	-	us

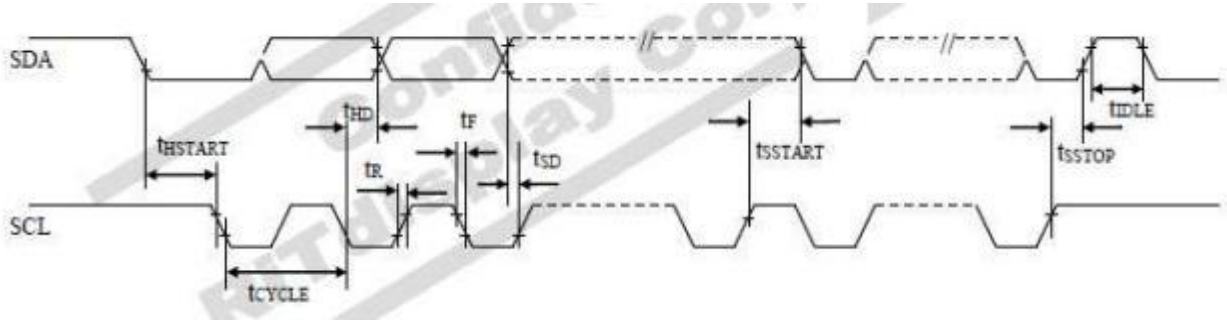

10. FUNCTIONNAL SPECIFICATIONS

10-1 COMMANDS

Refer to the SSD1312 IC Spec.

10-2 POWER UP AND POWER DOWN SEQUENCE

To protect OEL panel and extend the panel life time, the driver IC power up/down routine should include a delay period between high voltage and low voltage power sources during turn on/off. It gives the OEL panel enough time to complete the action of charge and discharge before/after the operation.

10-2-1 Power up Sequence:

1. Power up V_{DD}
2. Send Display off command
3. Initialization
4. Clear Screen
5. Power up V_{PP}
6. Delay 100ms
   (When V_{PP} isstable)
7. Send Display on command

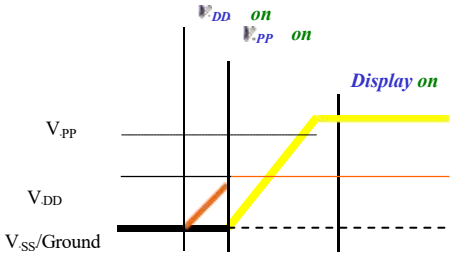

10-2-2 Power down Sequence:

1. Send Display off command
2. Power down Vpp
3. Delay 100ms
   (When V_{CC} / V_{BAT} is reach 0 and panel is completely discharges)
4. Power down V_{DD}

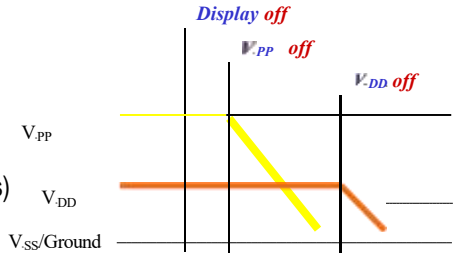

Note:

1) Since an ESD protection circuit is connected between V_{DD} and VBPPB inside the driver IC, V_{PP} becomes lower than V_{DD} whenever VBDDB is ON and V_{PP} is OFF.
2) VPPB should be kept float (disable) when it is OFF.
3) Power Pins (V_{DD}, Vpp) can never be pulled to ground under any circumstance.
4) VBDDB should not be power down before Vpp power down.

10-3 Reset Circuit

When RESB input is low, the chip is initialized with the following status:

1. Display is OFF
2. 128×128 Display Mode
3. Normal segment and display data column and row address mapping (SEG0 mapped to column address 00h and COM0 mapped to row address 00h)
4. Shift register data clear in serial interface
5. Display start line is set at display RAM address 0
6. Column address counter is set at 0
7. Normal scan direction of the COM outputs
8. Contrast control register is set at 80h
9. Internal DC-DC is selected

10-4 Actual Application Example

Command usage and explanation of an actual example . Vpp generated by externally.

<Power up Sequence>

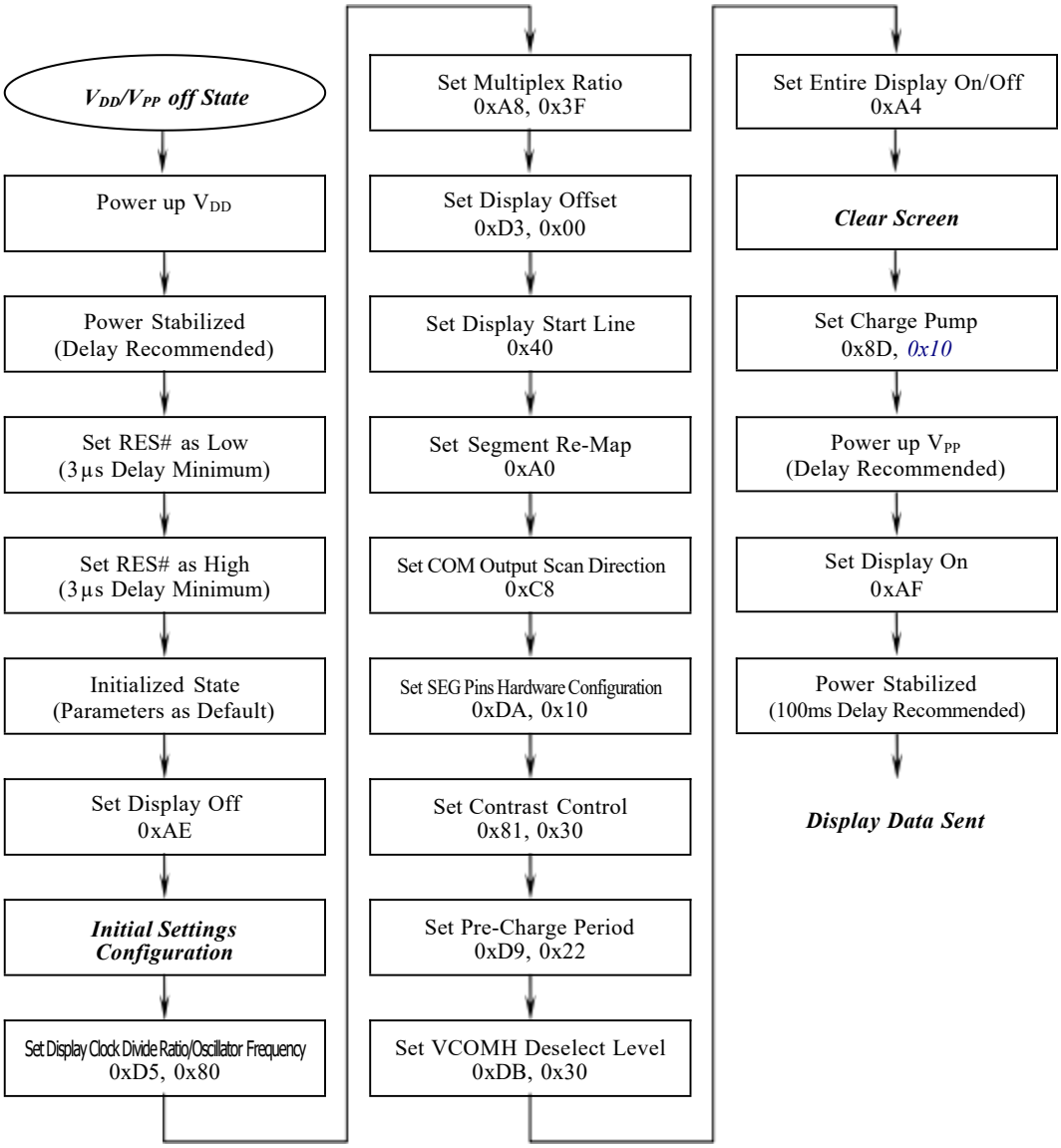

*If the noise is accidentally occurred at the displaying window during the operation, please reset the display in order to recover the display function.

<Power down Sequence>

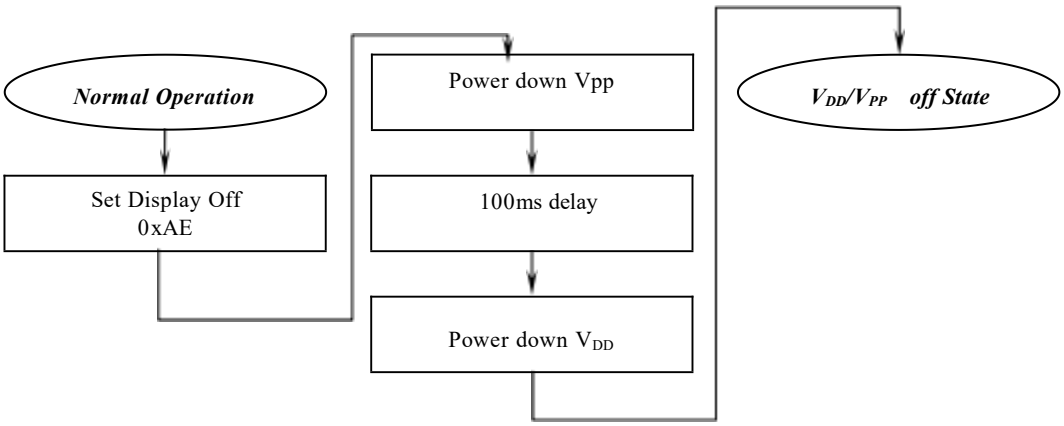

<Entering Sleep Mode>

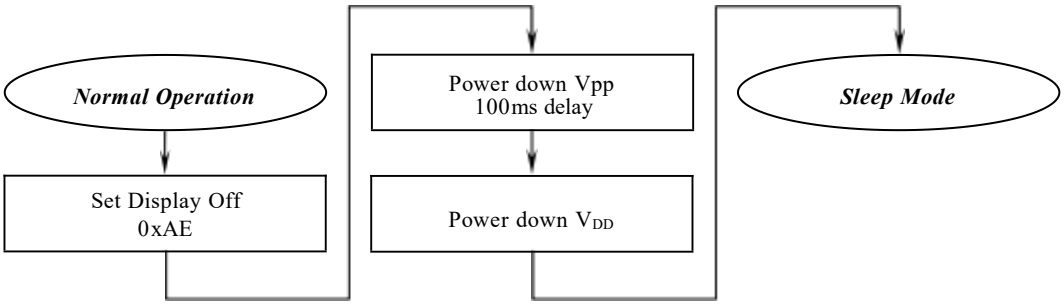

<Exiting Sleep Mode>

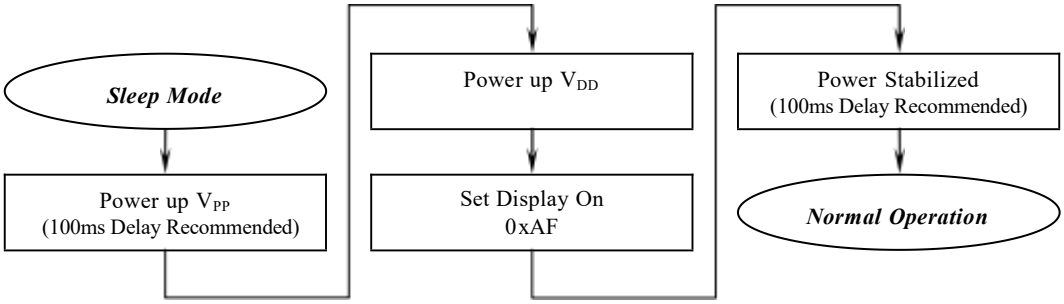

```
void Init_Lcd(void)
{
        RST=1;
        Delay_1ms(30);
        RST=0;
        Delay_1ms(10);
        RST=1;
        Delay_1ms(10);

        Write_Command(0xAE);//set display display ON/OFF,AEH/AFH

        Write_Command(0x40);//set display start line:COM0

        Write_Command(0x20);//set memory addressing mode
        Write_Command(0x02);//page addressing mode

        Write_Command(0x81);//set contrast control
        Write_Command(0x30);

        Write_Command(0xAD);//External or Internal Iref setting
        Write_Command(0x40);//Select external Iref

        Write_Command(0xA0);//set segment re-map

        Write_Command(0xA4);//entire display on: A4H:OFF/A5H:ON

        Write_Command(0xA6);//set normal/inverse display: A6H:normal/A7H:inverse

        Write_Command(0xA8);//set multiplex ratio
        Write_Command(0x3F);//64

        Write_Command(0xC8);//set com outputscan direction

        Write_Command(0xD3);//set display    offset
        Write_Command(0x00);//

        Write_Command(0xD5);//set display    clock divide ratio/oscillator frequency
        Write_Command(0x80);//

        Write_Command(0xD9);//set pre-charge period
        Write_Command(0x22);//

        Write_Command(0xDA);//set SEG    pins hardware configuration
        Write_Command(0x10);//
```

```
        Write_Command(0xDB);//set vcomh deselect level
        Write_Command(0x30);//0.83*VCC

        Write_Command(0x8D);//charge pump setting
        Write_Command(0x10);//disable charge pump,external VCC=9.0V

        Write_Command(0xAF);//set display display ON/OFF,AEH/AFH
    }
    void Write_Command (Uchar Command)
    {
        inti;
        CS=0;
        A0=0;
        for(i=0;i<8;i++)
         {
           SCLK=0;
           if((Command&0x80)==0)
               SDA=0;
           else
               SDA=1;
           SCLK=1;
           Command=Command<<1;
         }
        CS=1;
     }
    void Write_Data (Uchar Data)
    {
        inti;
        CS=0;
        A0=1;
        for(i=0;i<8;i++)
         {
           SCLK=0;
           if((Data&0x80)==0)
               SDA=0;
           else
               SDA=1;
           SCLK=1;
           Data=Data<<1;
         }
        CS=1;
    }
```

11. RELIABILITY

ITEM	CONDITIONS	CRITERION
OPERATING TEMPERATURE	HIGH TEMPERTURE +70℃ 240HRS	NO DEFECT IN DISPLAYING AND OPERATIONAL FUNCTION
	LOW TEMPERTURE -40℃ 240HRS	
STORAGE TEMPERATURE	HIGH TEMPERTURE +85℃ 240HRS	NO DEFECT IN DISPLAYING AND OPERATIONAL FUNCTION
	LOW TEMPERTURE - 40℃ 240HRS	
HUMIDITY	60℃ 90%RH 120HRS	NO DEFECT IN DISPLAYING AND OPERATIONAL FUNCTION
VIBRATION	.Operating Time: thirty minutes exposure for each direction (X,Y,Z) .Sweep Frequency: 10 ~ 55Hz (1 min) . Amplitude: 1.5mm	NO DEFECT IN DISPLAYING AND OPERATIONAL FUNCTION
THERMAL SHOCK	-40℃(60mins) ← ☯ +85℃(60mins), 24 cycles	NO DEFECT IN DISPLAYING AND OPERATIONAL FUNCTION

*NOTE: TEST CONDITION

(1)TEMPERATURE AND HUMIDITY: IF NO SPECIFICATION, TEMP. SET AT 25±2℃, HUMIDITY SET AT 60±5%RH

(2) OPERATING STATE: SAMPLES SUBJECT TO THE TESTS SHALL BE IN " OPERATING" CONDITION

12. Outgoing Quality Control Specifications

12.1 Environment Required

Customer's test & measurement are required to be conducted under the following conditions:

Temperature:	23 ± 5。C
Humidity:	55 ± 15% RH
Fluorescent Lamp:	30W
Distance between the Panel & Lamp:	≥ 50cm
Distance between the Panel & Eyes of the Inspector:	≥ 30cm

Finger glove (or finger cover) must be worn by the inspector.

Inspection table or jig must be anti-electrostatic.

12.2 Sampling Plan

Level II, Normal Inspection, Single Sampling, MIL-STD-105E

12.3 Criteria & Acceptable Quality Level

Partition	AQL	Definition
Major	0.65	Defects in Pattern Check (Display On)
Minor	1.0	Defects in Cosmetic Check (Display Off)

12.3.1 Cosmetic Check (Display Off) in Non-Active Area

Check Item	Classification	Criteria
Panel General Chipping	Minor	X > 6 mm (Along with Edge) Y > 1 mm (Perpendicular to edge) 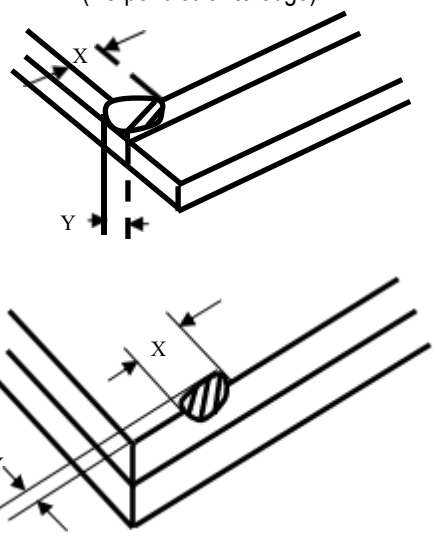

12.3.1 Cosmetic Check (Display Off) in Non-Active Area (Continued)

Check Item	Classification	Criteria
Panel Crack	Minor	Any crack is not allowable. 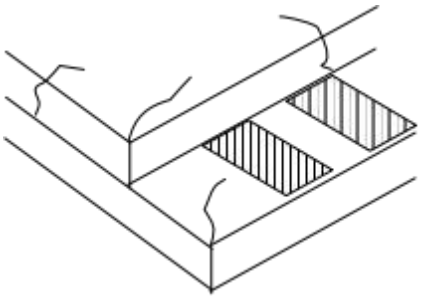
Copper Exposed (Even Pin or Film)	Minor	Not Allowable by Naked Eye Inspection
Film or Trace Damage	Minor	
Terminal Lead Prober Mark	Acceptable	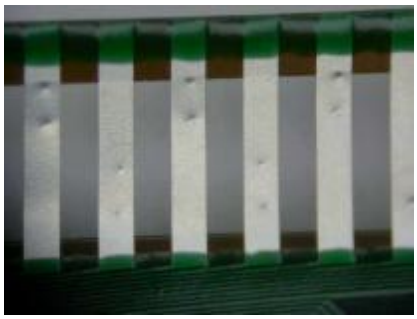
Glue or Contamination on Pin (Couldn't Be Removed by Alcohol)	Minor	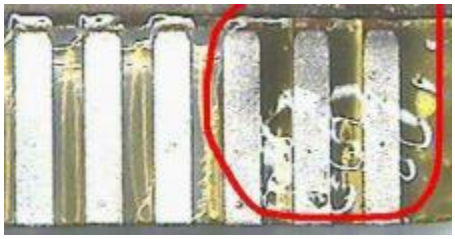
Ink Marking on Back Side of panel (Exclude on Film)	Acceptable	Ignore for Any

12.3.2 Cosmetic Check (Display Off) inActive Area

It is recommended to execute in clear room environment (class 10k) if actual in necessary.

Check Item	Classification	Criteria
Any Dirt & Scratch on Polarizer's Protective Film	Acceptable	Ignore for not Affect the Polarizer
Scratches, Fiber, Line-Shape Defect (On Polarizer)	Minor	W ≤ 0.1 Ignore W > 0.1 L ≤ 2 n ≤ 1 L > 2 n = 0
Dirt, Black Spot, Foreign Material, (On Polarizer)	Minor	Φ ≤ 0.1 Ignore 0.1 < Φ ≤ 0.25 n ≤ 1 0.25 < Φ n = 0
Dent, Bubbles, White spot (Any Transparent Spot on Polarizer)	Minor	Φ ≤ 0.5 ☞Ignore if no Influence on Display 0.5 < Φ n = 0 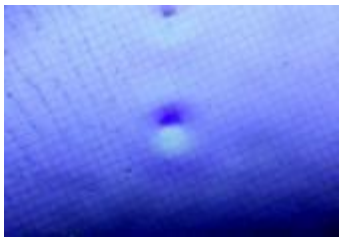
Fingerprint, Flow Mark (On Polarizer)	Minor	Not Allowable

* Protective film should not be tear off when cosmetic check.

** Definition of W & L & Φ (Unit: mm): Φ = (a + b) / 2

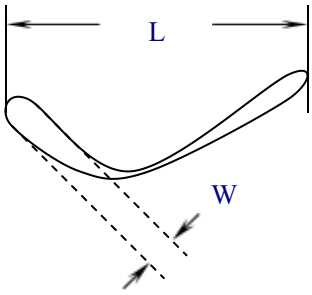

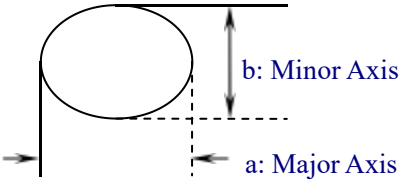

12.3.3 Pattern Check (Display On) in Active Area

Check Item	Classification	Criteria
No Display	Major	
Missing Line	Major	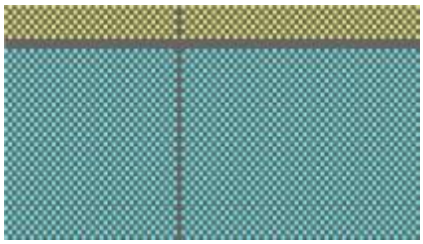
Pixel Short	Major	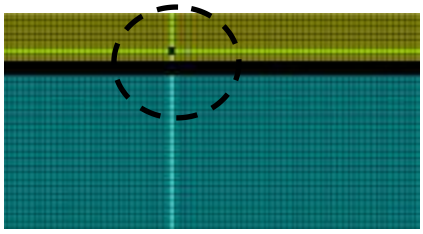
Darker Pixel	Major	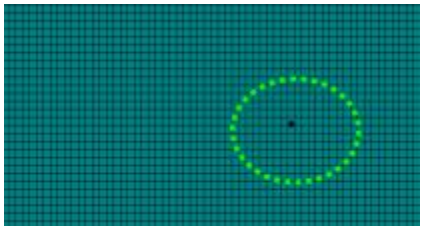
Wrong Display	Major	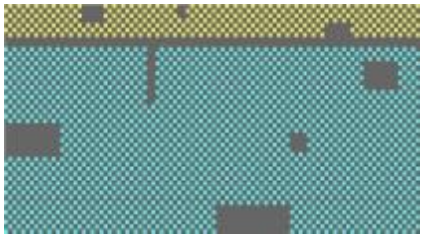
Un-uniform	Major	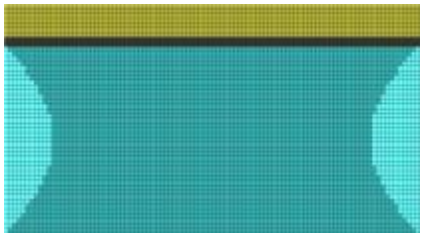

13. Package Specifications

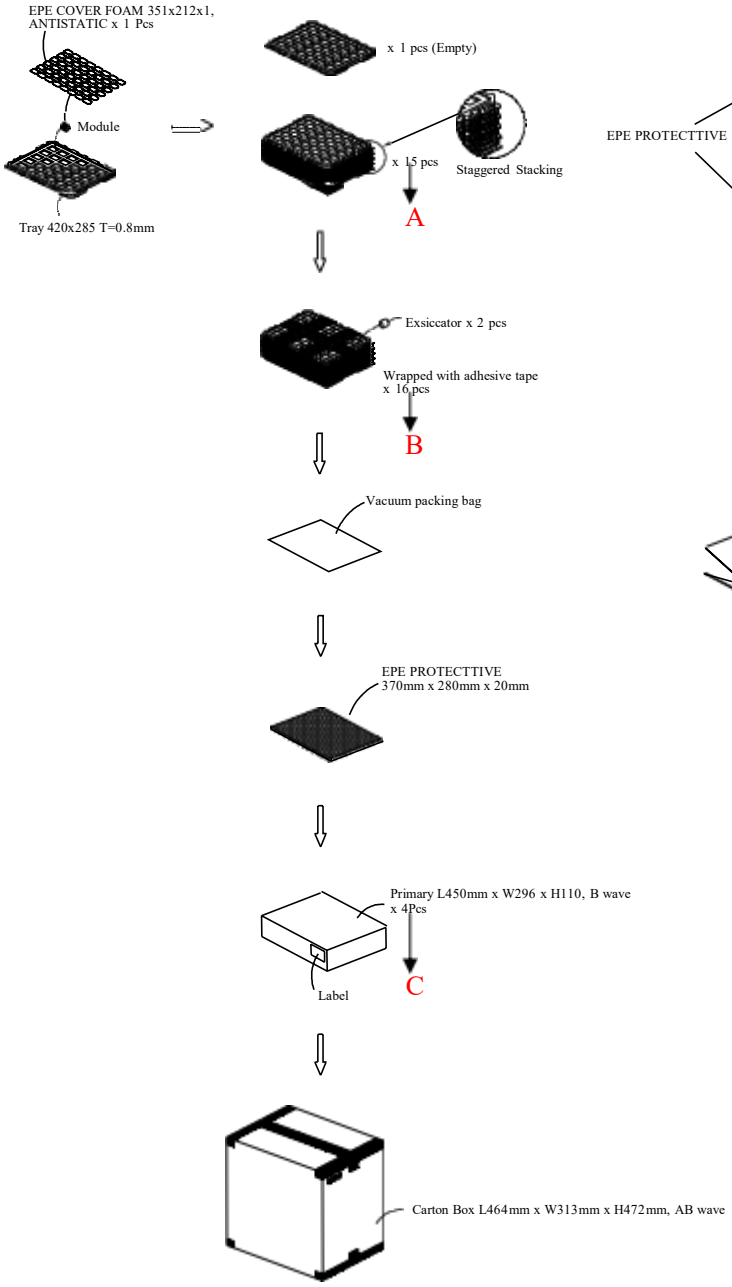

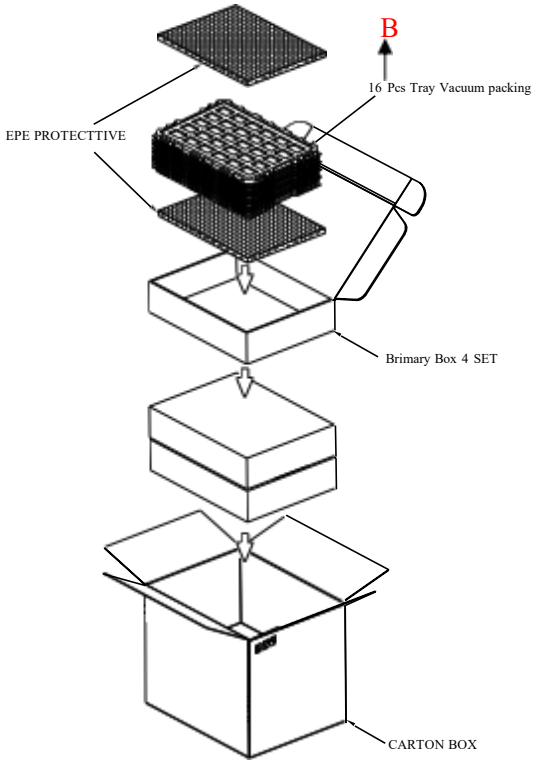

Label

Univision Technology Inc.
Part ID :
Lot ID :
Q'ty :
QC :

14. Precautions When Using These OEL Display Modules

14.1 Handling Precautions

1) Since the display panel is being made of glass, do not apply mechanical impacts such us dropping from a high position.
2) If the display panel is broken by some accident and the internal organic substance leaks out, be careful not to inhale nor lick the organic substance.
3) If pressure is applied to the display surface or its neighborhood of the OEL display module, the cell structure may be damaged and be careful not to apply pressure to these sections.
4) The polarizer covering the surface of the OEL display module is soft and easily scratched. Please be careful when handling the OEL display module.
5) When the surface of the polarizer of the OEL display module has soil, clean the surface. It takes advantage of by using following adhesion tape.

   * Scotch Mending Tape No. 810 or an equivalent

   Never try to breathe upon the soiled surface nor wipe the surface using cloth containing solvent such as ethyl alcohol, since the surface of the polarizer will become cloudy.

   Also, pay attention that the following liquid and solvent may spoil the polarizer:

   * Water
   * Ketone
   * Aromatic Solvents
6) Hold OEL display module very carefully when placing OEL display module into the system housing. Do not apply excessive stress or pressure to OEL display module. And, do not over bend the film with electrode pattern layouts. These stresses will influence the display performance. Also, secure sufficient rigidity for the outer cases.

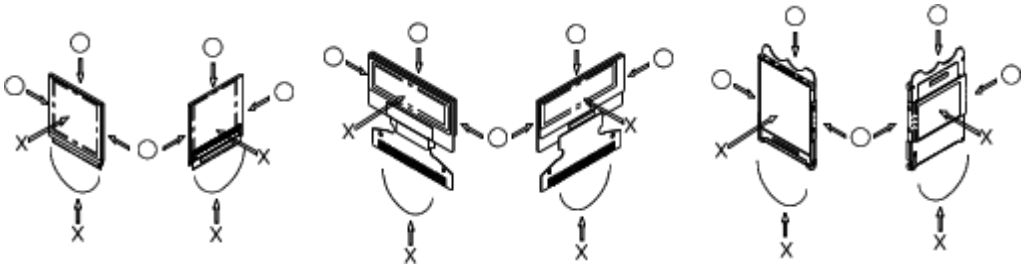

7) Do not apply stress to the driver IC and the surrounding molded sections.
8) Do not disassemble nor modify the OEL display module.
9) Do not apply input signals while the logic power is off.
10) Pay sufficient attention to the working environments when handing OEL display modules to prevent occurrence of element breakage accidents by static electricity.
    * Be sure to make human body grounding when handling OEL display modules.
    * Be sure to ground tools to use or assembly such as soldering irons.
    * To suppress generation of static electricity, avoid carrying out assembly work under dry environments.
    * Protective film is being applied to the surface of the display panel of the OEL display module. Be careful since static electricity maybe generated when exfoliating the protective film.
11) Protection film is being applied to the surface of the display panel and removes the protection film before assembling it. At this time, if the OEL display module has been stored for a long period of time, residue

adhesive material of the protection film may remain on the surface of the display panel after removed of the film. In such case, remove the residue material by the method introduced in the above Section 5).

12) If electric current is applied when the OEL display module is being dewed or when it is placed under high humidity environments, the electrodes maybe corroded and be careful to avoid the above.

14.2 Storage Precautions

1) When storing OEL display modules, put them in static electricity preventive bags avoiding exposure to direct sunlight nor to lights of fluorescent lamps. and, also, avoiding high temperature and high humidity environment or low temperature (less than 0。C) environments. (We recommend you to store these modules in the packaged state when they were shipped from Allvision technology Inc.)

At that time, be careful not to let water drops adhere to the packages or bags nor let dewing occur with them.

2) If electric current is applied when water drops are adhering to the surface of the OEL display module, when the OEL display module is being dewed or when it is placed under high humidity environments, the electrodes may be corroded and be careful about the above.

14.3 Designing Precautions

1) The absolute maximum ratings are the ratings which cannot be exceeded for OEL display module, and if these values are exceeded, panel damage maybe happen.

2) To prevent occurrence of malfunctioning by noise, pay attention to satisfy the V_{IL} and V_{IH} specifications and, at the sametime, to make the signal line cable as short as possible.

3) We recommend you to install excess current preventive unit (fuses, etc.) to the power circuit (V_{DD}). (Recommend value: 0.5A)

4) Pay sufficient attention to avoid occurrence of mutual noise interference with the neighboring devices.

5) As for EMI, take necessary measures on the equipment side basically.

6) When fastening the OEL display module, fasten the external plastic housing section.

7) If power supply to the OEL display module is forcibly shut down by such errors as taking out the main battery while the OEL display panel is in operation, we cannot guarantee the quality of this OEL display module.

8) The electric potential to be connected to the rear face of the ICchip should be as follows: SSD1315

* Connection (contact) to any other potential than the above may lead to rupture of the IC.

14.4 Precautions when disposing of the OEL display modules

1) Request the qualified companies to handle industrial wastes when disposing of the OEL display modules. Or, when burning them, be sure to observe the environmental and hygienic laws and regulations.

14.5 Other Precautions

1) When an OEL display module is operated for a long of time with fixed pattern may remain as an after image or slight contrast deviation may occur.

Nonetheless, if the operation is interrupted and left unused for a while, normal state can be restored. Also, there will be no problem in the reliability of the module.

2) To protect OEL display modules from performance drops by static electricity rapture, etc., do not touch the following sections whenever possible while handling the OEL display modules.

* Pins and electrodes
* Pattern layouts such as the FPC

3) With this OEL display module, the OEL driver is being exposed. Generally speaking, semiconductor elements

change their characteristics when light is radiated according to the principle of the solar battery. Consequently, if this OEL driver is exposed to light, malfunctioning may occur.

* Design the product and installation method so that the OEL driver maybe shielded from light in actual usage.

* Design the product and installation method so that the OEL driver may be shielded from light during the inspection processes.

4) Although this OEL display module stores the operation state data by the commands and the indication data, when excessive external noise, etc. enters into the module, the internal status may be changed. It therefore is necessary to take appropriate measures to suppress noise generation or to protect from influences of noise on the system design.

5) We recommend you to construct its software to make periodical refreshment of the operation statuses (re-setting of the commands andre-transference of the display data) to cope with catastrophic noise.